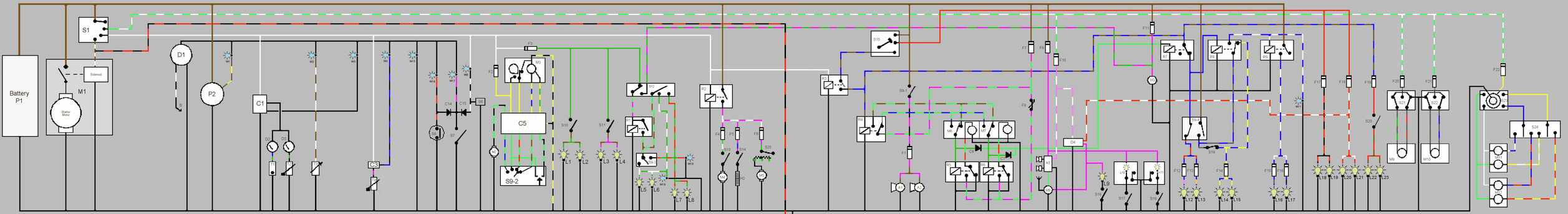

A1 HORN RIGHT
A2 HORN LEFT
A3 SPEAKER RIGHT
A4 SPEAKER LEFT
A5 RADIO
C1 INSTRUMENT STABILISER
C2 LOW FUEL UNIT
C3 LOW COOLANT UNIT
C4 LOW OIL UNIT
C5 WIPER DELAY UNIT
C6 DIODE RH LIFT MOTOR
C7 DIODE LH LIFT MOTOR
C8 TACHO RESISTOR
C9 THROTTLE VALVE
C10 SENSOR ENGINE MOUNT
C11 AIR REGULATOR
C12 SOLENOID
C13 AIR FLOW METER
C14 DIODE - BRAKE FLUID SWITCH
C15 DIODE HANDBRAKE
D1 TACHOMETER
D2 TEMPERATURE GAUGE
D3 FUEL GAUGE
D4 CLOCK

F1 HORN 15A
F2 WIPERS 10A
F3 LIGHTING 10A
F4 RAD FAN 15A
F5 REAR WINDOW 10A
F6 HEATER FAN 10A
F7 WINDOW MOTORS 15A
F8 CIRCUIT BREAKER
F9 AERIAL 5A
F10 RADIO 5A
F11 CIGAR LIGHTER 10A
F12 DIP BEAM LEFT 7.5A
F13 DIP BEAM RIGHT 7.5A
F14 AUX LAMPS 10A
F15 MAIN BEAM LEFT 7.5A
F16 MAIN BEAM RIGHT 7.5A
F17 LEFT SIDES/PLATE 5A
F18 RIGHT SIDES/PLATE 5A
F19 REAR FOG 5A
F20 WINDOW 25A
F21 WINDOW 25A
F22 MIRRORS 5A
H1 AUTO CHOKE
H2 REAR SCREEN
H3 CIGAR LIGHTER

I1 COIL FORD
I2 FUEL CUT OFF
I3 COIL NISSAN
L1 REV LIGHT RIGHT
L2 REV LIGHT LEFT
L3 BRAKE LIGHT RIGHT
L4 BRAKE LIGHT LEFT
L5 IND LIGHT RIGHT FRONT
L6 IND LIGHT RIGHT REAR
L7 IND LIGHT LEFT FRONT
L8 IND LIGHT LEFT REAR
L9 BOOT LIGHT
L10 INTERIOR RIGHT
L11 INTERIOR LEFT
L12 DIP LEFT
L13 DIP RIGHT
L14 AUX RIGHT
L15 AUX LEFT
L16 MAIN LEFT
L17 MAIN RIGHT
L18 SIDE FRONT LEFT
L19 REAR LEFT / PLATE
L20 REAR RIGHT / PLATE
L21 SIDE FRONT RIGHT
L22 REAR LEFT FOG
L23 REAR RIGHT FOG

M1 STARTER
M2 SCREEN WASHER
M3 WIPER
M4 RADIATOR FAN
M5 HEATER FAN
M6 RIGHT HEADLIGHT
M7 LEFT HEADLIGHT
M8 AERIAL
M9 RIGHT WINDOW
M10 LEFT WINDOW
M11 LEFT MIRROR
M12 RIGHT MIRROR
M13 FUEL PUMP
P1 BATTERY
P2 ALTERNATOR
R1 FLASHER
R2 IGNITION OVERLOAD
R3 HEADLIGHT SUPPLY
R4 LIFT MOTOR SWITCH
R5 LIFT MOTOR LEFT
R6 LIFT MOTOR RIGHT
R7 HEADLIGHT INHIBIT
R8 AUX FLASH
R9 MAIN BEAM
R10 ENGINE MANAGEMENT
R11 POWER TRANSISTOR

S1 INGNITION
S2 DISTRIBUTOR
S3 LEFT BELT
S4 RIGHT BELT
S5 SEAT SENSOR
S6 RIGHT BRAKE PAD
S7 HANDBRAKE
S8 BRAKE FLUID
S9-1 HORN PUSH
S9-2 SCREENWASH / WIPE
S9-3 INDICATORS
S9-4 HEADLAMP DIP
S10 REVERSING LIGHTS
S11 BRAKE LIGHTS
S12 HAZARD LIGHTS
S13 RADIATOR FAN
S14 REAR SCREEN
S15 MAIN LIGHTS
S16 BOOT LIGHT
S17 COURTESY LIGHT RIGHT
S18 COURTESY LIGHT LEFT
S19 AUX LIGHTS
S20 REAR FOGS

S21 WINDOW RIGHT
S22 WINDOW LEFT
S23 MIRROR JOYSTICK
S24 MIRROR SELECT
S25 HEATER FAN
S26 REVERSE LIGHT
T1 TEMPERATURE SENDER
T2 FUEL LEVEL
T3 LOW OIL PRESSURE
T4 LOW WATER LEVEL
T5 LOW OIL LEVEL
W1 CHARGING LAMP
W2 OIL PRESSURE LAMP
W3 FUEL LOW LAMP
W4 WATER LOW LAMP
W5 OIL LEVEL LOW LAMP
W6-7 SEATBELT WARNING
W8 BRAKEPAD WARNING
W11 MAIN BEAM LAMP
W15 WATER TEMP LAMP
W16 BRAKE FLUID LAMP
W17 HANDBRAKE ON LAMP
W18 LEFT INDICATOR
W19 RIGHT INDICATOR

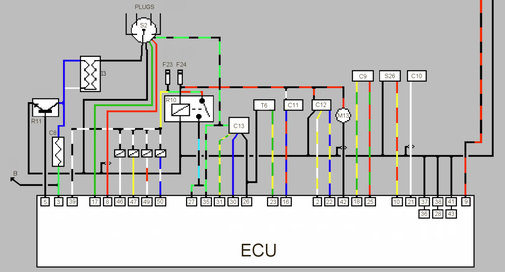
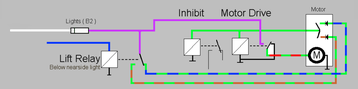
SST/Sabre headlight lift motor system